UDB4 in AeroFPV Quadcopter

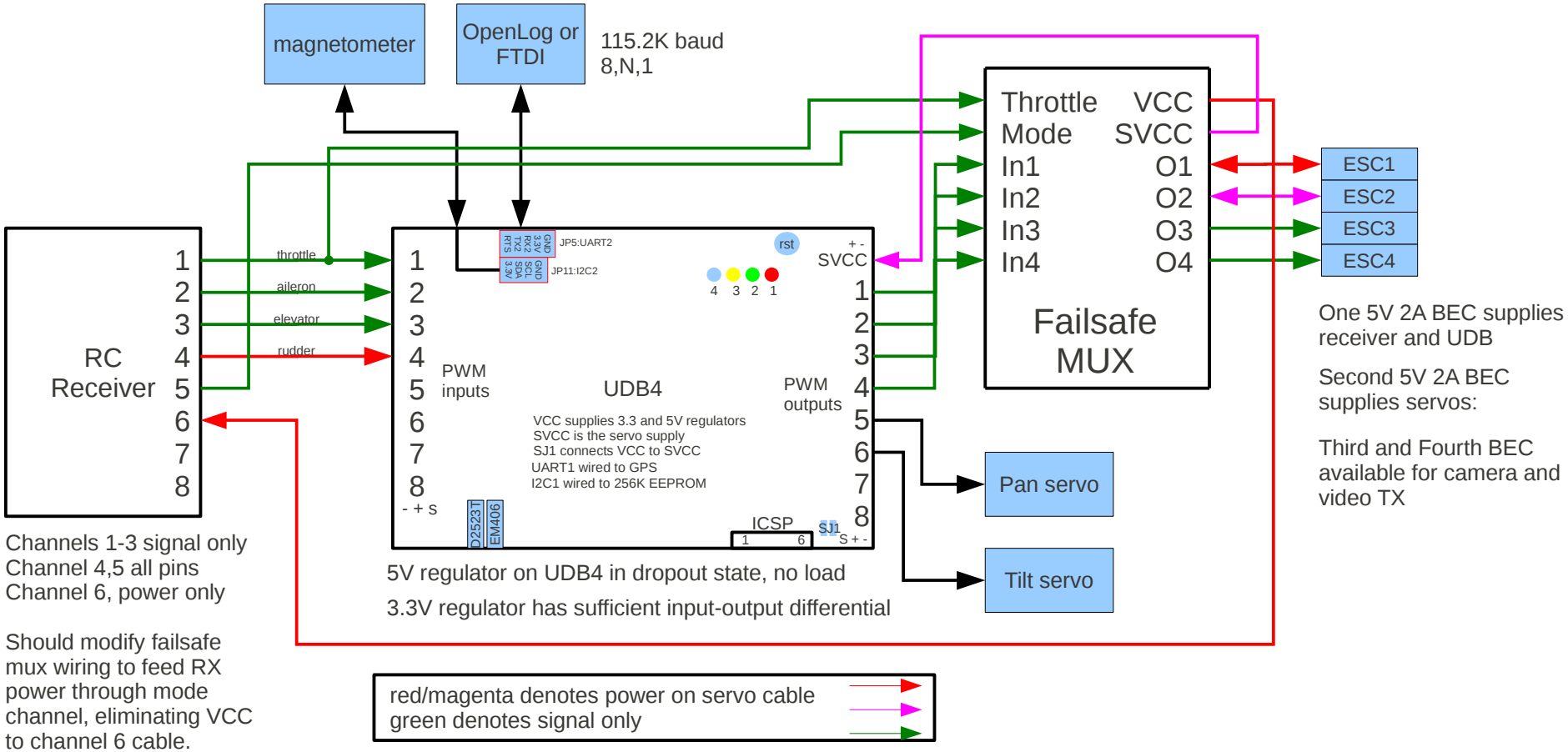

Channels 1-3 signal only
Channel 4,5 all pins
Channel 6, power only

Should modify failsafe mux wiring to feed RX power through mode channel, eliminating VCC to channel 6 cable.

One 5V 2A BEC supplies receiver and UDB

Second 5V 2A BEC supplies servos:

Third and Fourth BEC available for camera and video TX